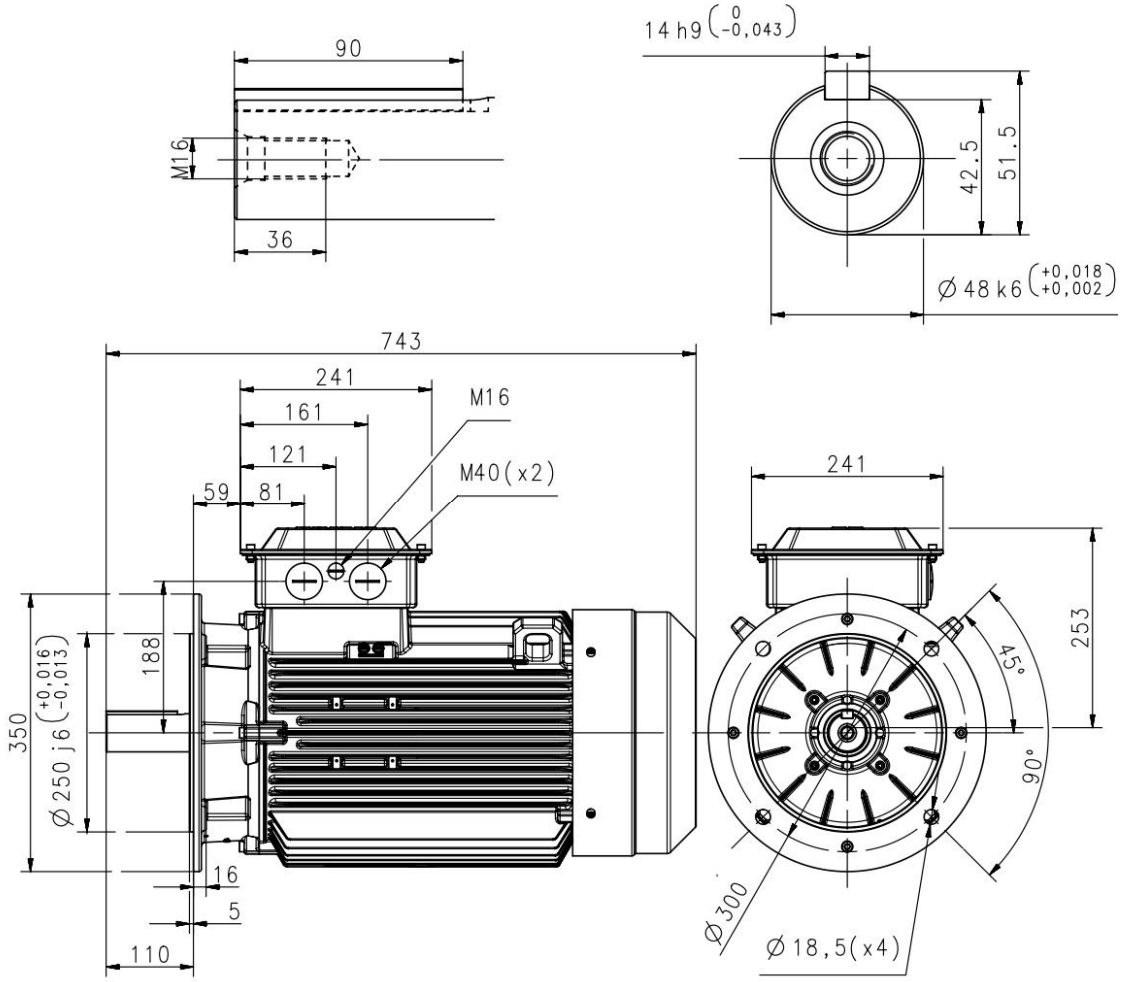

Additional information:

Dimension Print	Motor Type: IE3M2BAX 180MLB4 180MLA6 B5, V1, V3	Document No: 3GZC500018-35 A 13 BA 180 A
Description: STANDARD SQUIRREL CAGE MOTOR		

Unit:	ABB Motors and Generators	Issued by:	Jeff Wang	Replaces:
Date:	2015-11-03	Approved by:	Michael Zhang	Replaced by:

ABB Ltd.	Customer Reference:	ABB